SPIROL®

APPLICATION ENGINEERING

Solid Pins
Application: Retention Pin in Surgical Stapler

The medical device manufacturer required a fastener to secure two halves of a plastic housing and allow for efficient assembly cycle times.

PRIOR SOLUTION:

Eleven (11) machined, self-tapping screws were used to secure the two outer housing components of a surgical stapler. The housing shells are Nylon with 60% glass fill. The manufacturer was experiencing issues with the screws stripping the plastic host that led to scrapped assemblies and delays on the assembly line. Additionally, if the screws weren't perfectly aligned, they would bore into the side of the hole. It was challenging to orient the screw to the driver bit, hold it in place, and then drive it straight into the assembly at the proper assembly torque. The torque varied depending on actual hole tolerance, actual screw thread tolerance, screw orientation, etc. Therefore, the assembly process itself was very complex and time consuming.

The surgical stapler manufacturer asked SPIROL for a solution that reduced product defects and improved the assembly cycle time.

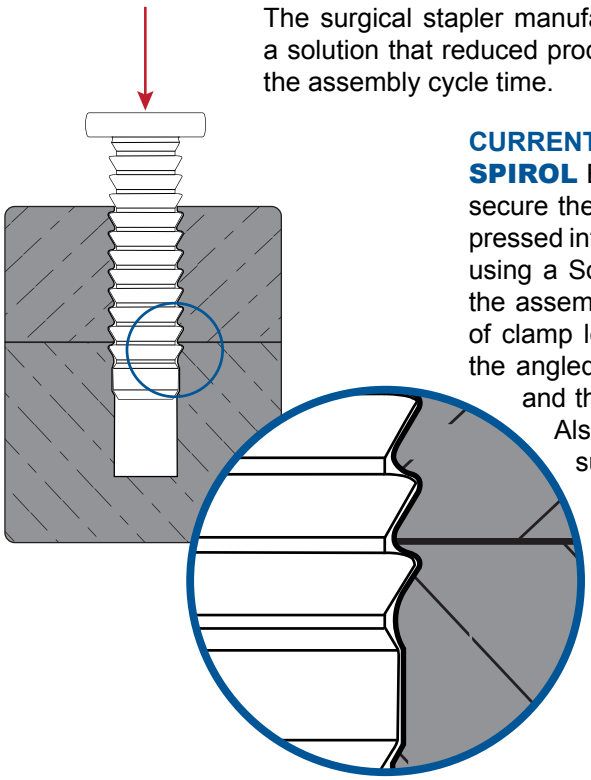

CURRENT SOLUTION:

SPIROL Engineering recommended using headed Solid Pins with barbs to secure the two halves of the plastic housing together. Barbed Pins can be pressed into a hole, saving the time required to advance a screw. Additionally, using a Solid Pin reduces the risk of damaging assemblies and delays on the assembly line. Unlike a screw, resistance to back out is not a function of clamp load generated by the screw; back out resistance is provided by the angled lead-in of the barbs that displace the plastic during installation, and the plastic backfilling behind the barbs to lock the pin in place. Also unlike screws, Barbed Pins are permanent and provide superior tamper resistance.

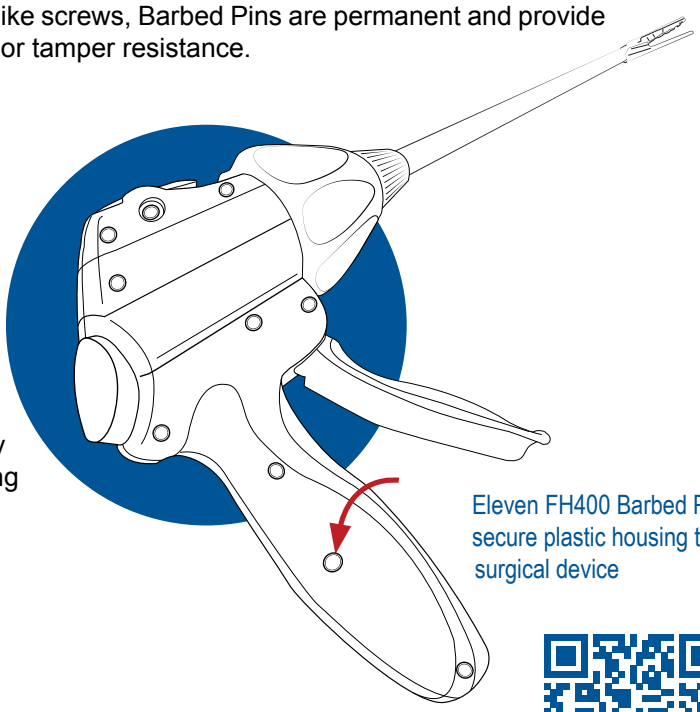

Eleven FH400 Barbed Pins secure plastic housing to surgical device

The surgical stapler manufacturer improved daily production rates and reduced scrap events by using SPIROL's HP400 Barbed Solid Pins instead of screws!

*Our staff of engineers will review your application needs and work with your design team to recommend the best solution. One way to start the process is to select **Pinning Applications** in our **Optimal Application Engineering** portal at: http://www.spirol.com/mkt/oae/?oae=106*

SPIROL® Innovative fastening solutions. Lower assembly costs.

*Please refer to **www.SPIROL.com** for current specifications and standard product offerings.*

SPIROL Application Engineers will review your application needs and work with you to recommend the optimum solution. One way to start the process is to visit our **Optimal Application Engineering** portal at **SPIROL.com**.

Technical Centers

Americas

SPIROL International Corporation
30 Rock Avenue
Danielson, Connecticut 06239 U.S.A.
Tel. +1 860 774 8571
Fax. +1 860 774 2048

SPIROL Shim Division
321 Remington Road
Stow, Ohio 44224 U.S.A.
Tel. +1 330 920 3655
Fax. +1 330 920 3659

SPIROL Canada
3103 St. Etienne Boulevard
Windsor, Ontario N8W 5B1 Canada
Tel. +1 519 974 3334
Fax. +1 519 974 6550

SPIROL Mexico
Avenida Avante #250
Parque Industrial Avante Apodaca
Apodaca, N.L. 66607 Mexico
Tel. +52 81 8385 4390
Fax. +52 81 8385 4391

SPIROL Brazil
Rua Mafalda Barnabé Soliane, 134
Comercial Vitória Martini, Distrito Industrial
CEP 13347-610, Indaiatuba, SP, Brazil
Tel. +55 19 3936 2701
Fax. +55 19 3936 7121

Europe

SPIROL France
Cité de l'Automobile ZAC Croix Blandin
18 Rue Léna Bernstein
51100 Reims, France
Tel. +33 3 26 36 31 42
Fax. +33 3 26 09 19 76

SPIROL United Kingdom
17 Princewood Road
Corby, Northants
NN17 4ET United Kingdom
Tel. +44 1536 444800
Fax. +44 1536 203415

SPIROL Germany
Ottostr. 4
80333 Munich, Germany
Tel. +49 89 4 111 905 71
Fax. +49 89 4 111 905 72

SPIROL Spain
08940 Cornellà de Llobregat
Barcelona, Spain
Tel. +34 93 669 31 78
Fax. +34 93 193 25 43

SPIROL Czech Republic
Sokola Tůmy 743/16
Ostrava-Mariánské Hory 70900
Czech Republic
Tel/Fax. +420 417 537 979

SPIROL Poland
ul. Solec 38 lok. 10
00-394, Warszawa, Poland
Tel. +48 510 039 345

Asia Pacific

SPIROL Asia Headquarters
1st Floor, Building 22, Plot D9, District D
No. 122 HeDan Road
Wai Gao Qiao Free Trade Zone
Shanghai, China 200131
Tel. +86 21 5046 1451
Fax. +86 21 5046 1540

SPIROL Korea
160-5 Seokchon-Dong
Songpa-gu, Seoul, 138-844, Korea
Tel. +86 (0) 21 5046-1451
Fax. +86 (0) 21 5046-1540

e-mail: **info@spirol.com**

SPIROL.com